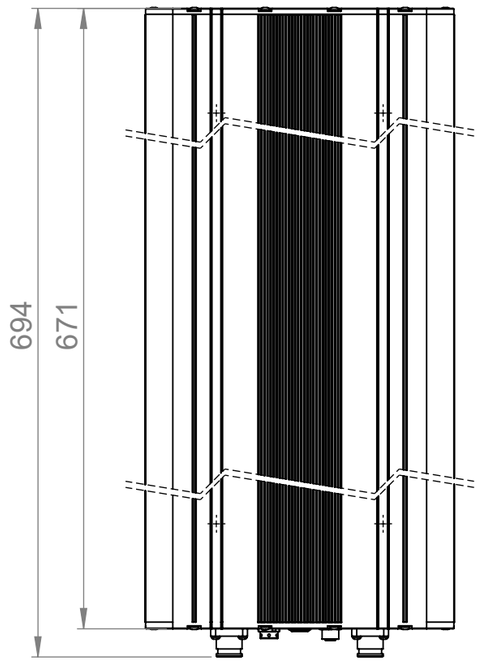

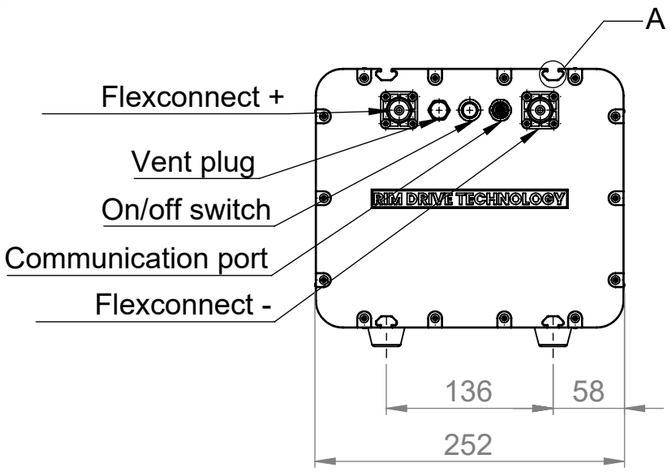

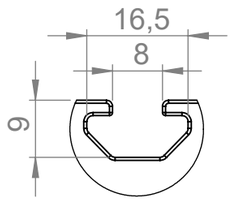

DETAIL A
SCALE 1 : 1

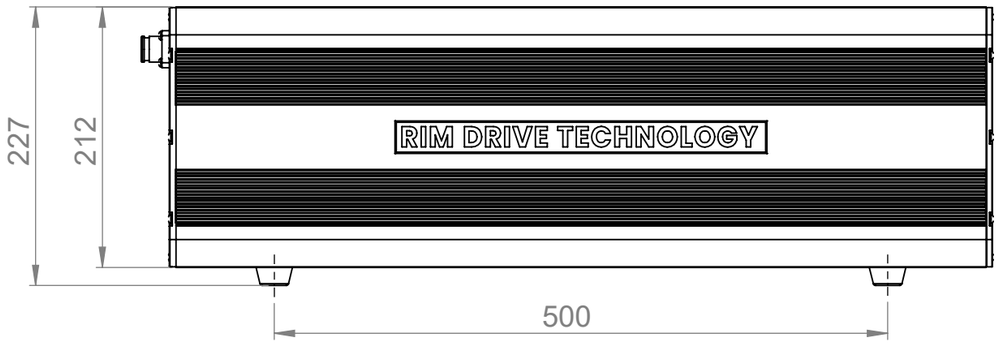

DESCRIPTION

108 - Battery 48V 6800Wh - Dimensions

[redacted]

UNLESS STATED OTHERWISE: According to NEN-ISO 2768-1-M		PROJECTION METHOD	UNLESS STATED OTHERWISE: ——	DRAWN	RS	DATE	04/11/2025
				CHECKED	WH	SCALE	1:5

Dim. (mm)	Tol. (mm)
0.5-3	± 0.1
>3-6	± 0.1
>6-30	± 0.2
>30-120	± 0.3
>120-400	± 0.5
>400-1000	± 0.8
>1000-2000	± 1.2
>2000-4000	± 2.0
>4000-8000	± 3.0

RIM DRIVE TECHNOLOGY

Without written permission of RIM DRIVE TECHNOLOGY nothing may be duplicated from these drawings or be exposed to thirds.

DIMENSIONS IN MILLIMETERS

[redacted]

REV. A

A3

SHEET 1 OF 1