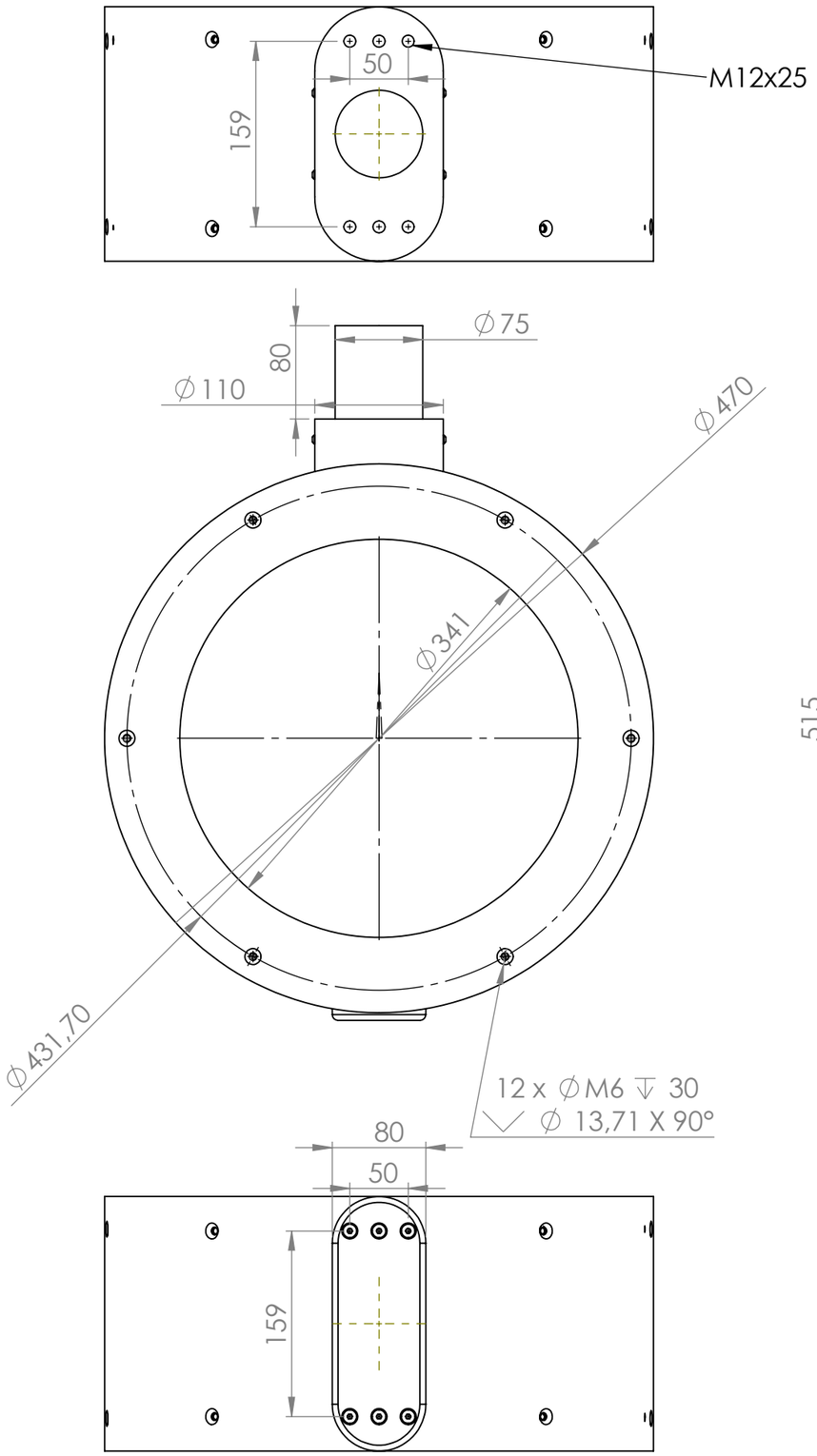

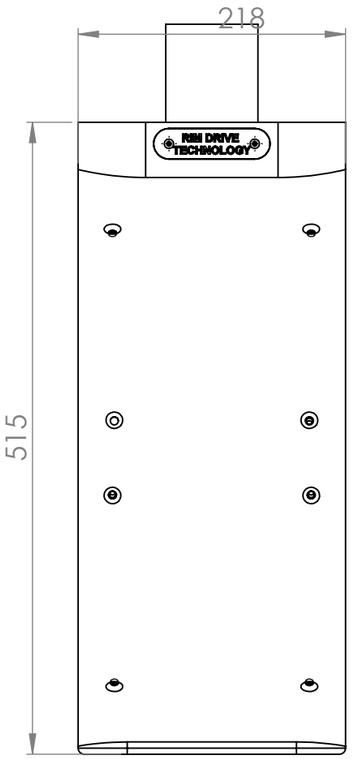

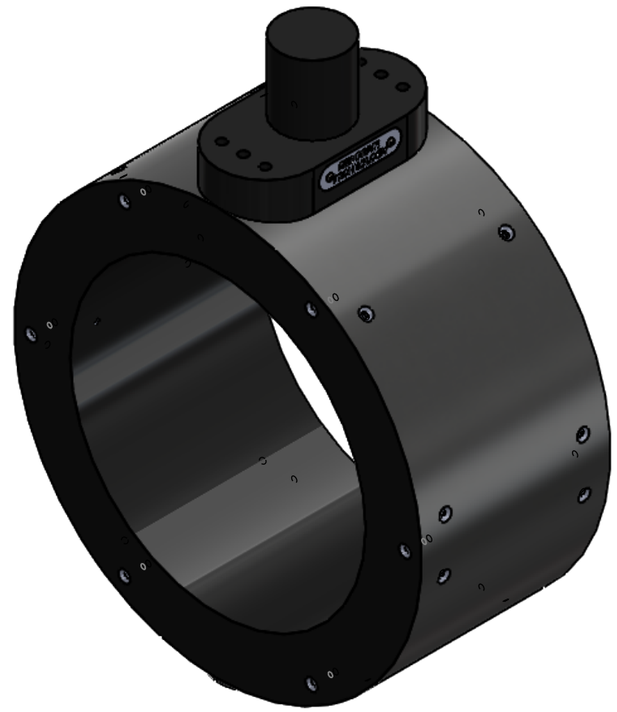

DESCRIPTION

341-Pro - Standard Thruster dimensions

[redacted]

UNLESS STATED OTHERWISE:

According to NEN-ISO 2768-1-M

Dim. (mm)	Tol. (mm)
0.5-3	± 0.1
>3-6	± 0.1
>6-30	± 0.2
>30-120	± 0.3
>120-400	± 0.5
>400-1000	± 0.8
>1000-2000	± 1.2
>2000-4000	± 2.0
>4000-8000	± 3.0

PROJECTION METHOD

RIM DRIVE TECHNOLOGY

Without written permission of RIM DRIVE TECHNOLOGY nothing may be duplicated from these drawings or be exposed to thirds.

DIMENSIONS IN MILLIMETERS

UNLESS STATED OTHERWISE:

—

DRAWN	WH	DATE	29-7-2024
CHECKED	NR	SCALE	1:5

[redacted]

REV. A

A3

SHEET 1 OF 1